H5-IC set

EFT/Burst Magnetic Field Source

Short description

The BS 06DU-s magnetic field source is used to generate magnetic EFT/burst fields. An EFT/burst generator (IEC 61000-4-4) supplies the field source with an EFT/burst current via an RF cable. The field source generates high magnetic fields (approx. 150 mT) in very small spaces. It is thus ideal for coupling the field into ICs. The field source can be inserted into a scanner or can be guided by hand. It has a SMB output.

The connection cable for the magnetic field source is available with an SHV connector (HV SHV-SMB 1m) or with a Fischer connector (HV FI-SMB 1m; a S103A023 Fischer connector). Please specify which cable/connector when placing your order.

Scope of delivery

1x BS 06DU-s, EFT/Burst Magnetic Field Source
1x HV FI-SMB 1 m, High-Voltage Cable, Fischer-SMB
1x H5-IC case, System case A5
1x H5-IC m, User Manual

Technical parameters

BS 06DU-s EFT/Burst Magnetic Field Source	
Probe head dimensions	(5 x 6) mm
Frequency range	0...560 MHz
Max. generated magnetic flux density	150 mT
Waveform of the injected test pulse	IEC 61000-4-4
Connector - output	SMB, female, jack
Sizes (L x W x H)	(140 x 8 x 8) mm
Weight	15 g
Max. Burst-voltage	4 kV

Principle of application with BS 06DU-s magnetic field source

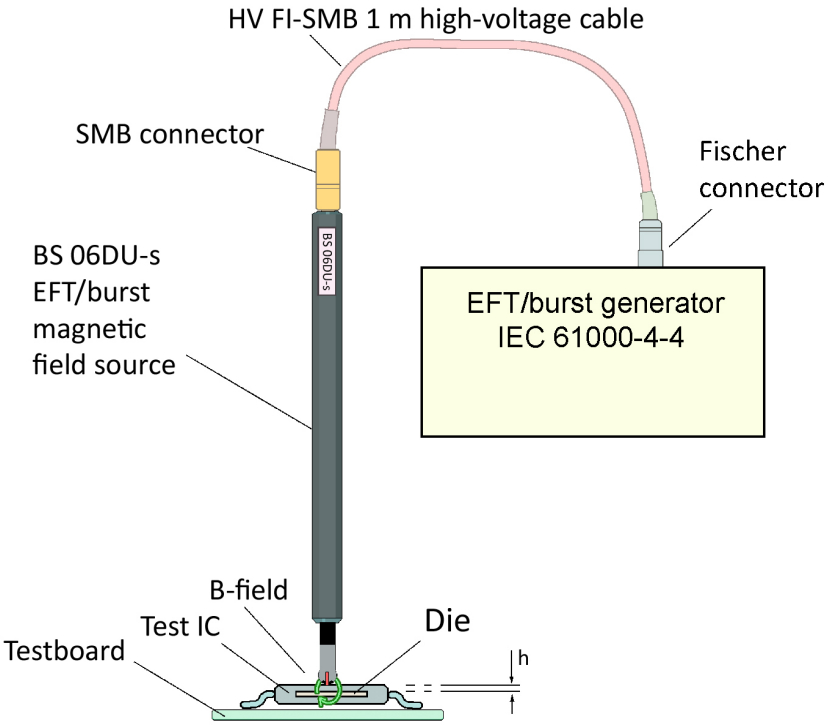

Fischer connector and SHV connector

Scope of delivery with BS 06DU-s and HV SHV-SMB 1 m cable

Scope of delivery with BS 06DU-s and HV FI-SMB 1 m cable